SJT-SPG-V2 MRL EBR

Direction & Speed Display Device

Manual

Version:V1.1

Contents

1 Product Introduction 2
1.1 Introduction 2
1.2 Feature 2
1.3 Range of application 2
1.4 Notice for use 2

2 Product Information 3
2.1 Model 3
2.2 Dimension 3
2.3 Composition 4
2.4 Functions 4

3 Wiring and Port 5
3.1 System Wiring 5
3.2 Port Description 6

4 Commissioning 7
4.1 Interface 7
4.2 Setting 8

1 Product Introduction

1.1 Introduction

SJT-SPG-V2 Direction & Speed display device for MRL Electric Brake Release (short as SJT-SPG-V2) is used for monitoring elevator speed. This product is mainly used for MRL elevator. It import signal through encoder feedback wire, and use inner analytical unit to calculate elevator speed and direction during elevator sliding in real-time. By 4 bit segment display, it displays elevator speed and direction during electric brake open. It is intuitive for monitor and easy for installation.

1.2 Feature

! Display elevator speed and direction through 4 segments in real-time "
! Automatically detect power supply from controller SPG card output. Once the power from SPG card recovers, this monitor device will switch off detection channel "
! Parameter can be set through button "
! Easy for installation, maintenance and debugging "
! Pass EMC test, with strong anti-electromagnetic interference capacity.

1.3 Range of application

! This monitor device need to work with SIN/COS SPG card and controller. It cannot work with other PG card.

1.4 Notice for use

! Environment #
Temperature:-10 $ ~ +60 $ "
Humidity: ≤95%RH, non-condensing "
! To ensure the performance and lifetime of product, it should be kept away from electric conduction, corrosive/explosive gases, metal powder, oil fog, dust and etc.
! Violent hit and Scratch should be avoided during transportation, installation and use.
! Installation, debugging and maintenance should be performed by professional.

2 Product Information

2.1 Model

The model description of SJT-SPG-V2 is as following:

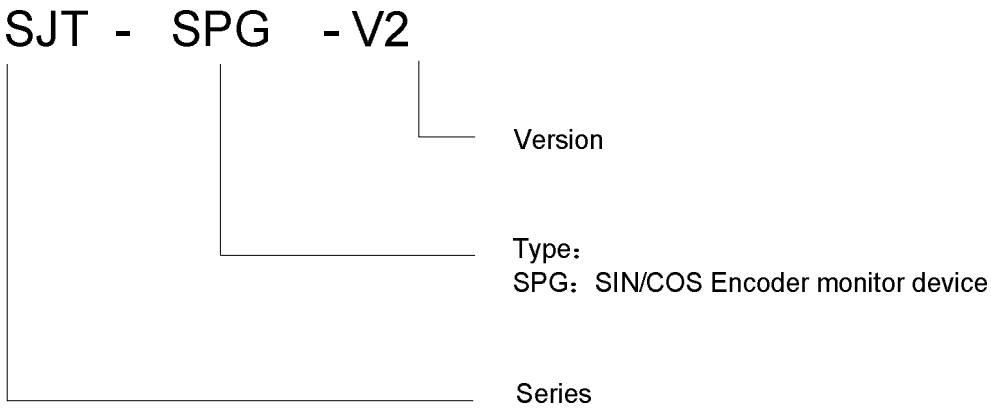

Figure 2.1 Model Description

2.2 Dimension

The dimension is as following:

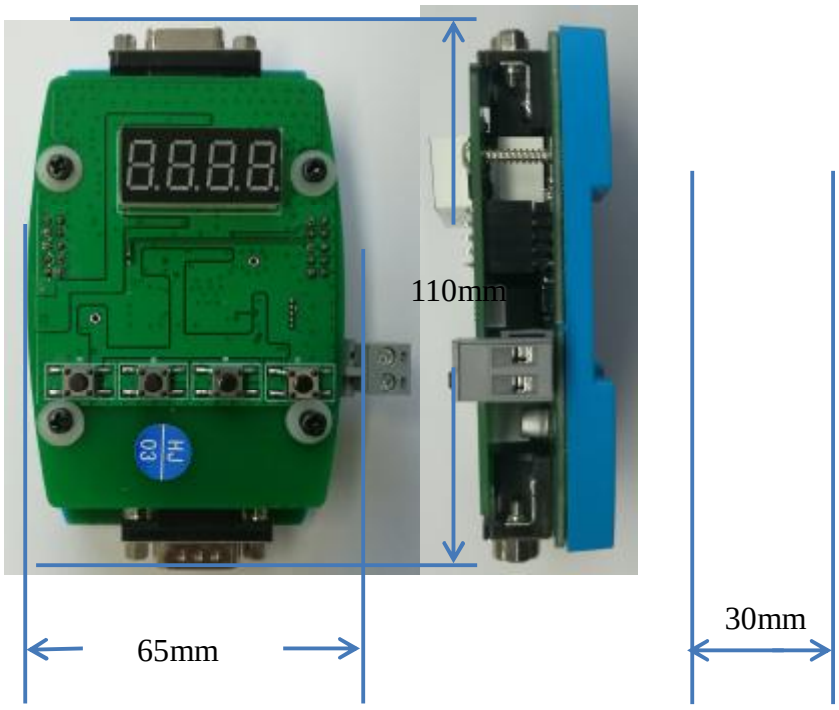

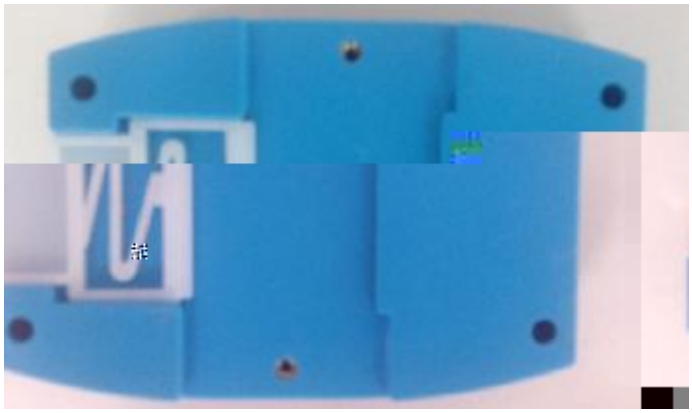

Figure 2.2 Dimension

Note: There's slot at back side, so it can be fastened on standard rail.

2.3 Composition

The main composition of product is shown in following chart:

Chart 2.1 Main composition of SJT-SPG-V2

2.4 Functions

Chart 2.2 Function list

No.	Function	Description
1	Automatic detection of SPG card power	Device monitor SPG card power input. Once SPG card power ON, device will cut off its connection with encoder.

3 Wiring and Port

3.1 System Wiring o

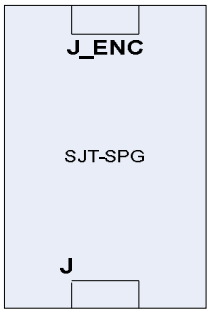

3.2 Port Description

Chart 3.1 J_SPG！Pin Seat " Output t ta (a) Tj0.(-) Tj.4270.0278 Tc (y) 4492 (p) Tj-0.3146.5 Tj-0.03352

Chart 3.3 External power port

Terminal Name	Position	Definition	Description
XS1	1	GND[V-]	Ground
	2	24V[V+]	DC12~DC24V Power Input

4 Commissioning

Commissioning and parameter setting are performed through SJT-SPG-V2 LED segments and buttons.

4.1 Interface

LED & Buttons interface for speed detection:

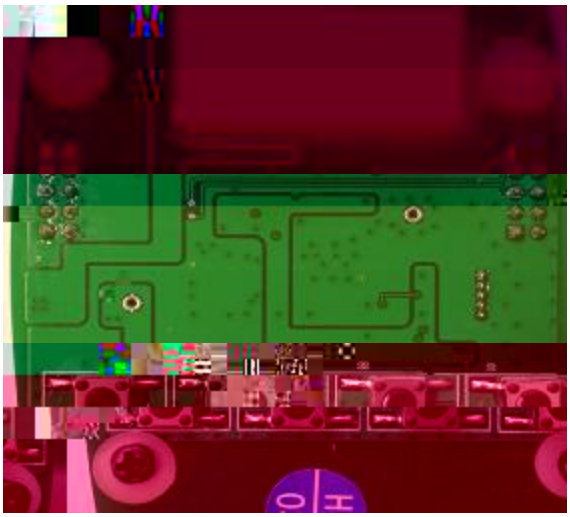

Figure 4.1 LED & Button Interface

Customer interface of data collector is composed of 4 segment LEDs and 4 buttons.

Chart 4.1 Operation buttons

Label	Position	Function
S1	1st Button from right	Enter
S2	2nd Button from right	Up
S3	3rd Button from right	Shift
S4	4th Bottom	

Note: The first bit is symbol bit. If forward, nothing displayed. If backward, display "-".

For example, elevator speed is 0.68m/s, then segment display will be as following:

For example, elevator speed is -0.27m/s, then segment display will be as following:

4.2 Setting

(23.2 Tc Tj0 Tc (ng) Tj/F2 105568 n (ng) Tj/F2 105568 n (ng) Tj/F2 u) Tj-0.11136 Tc (a) Tj-00.11136 Tc (d)

w w

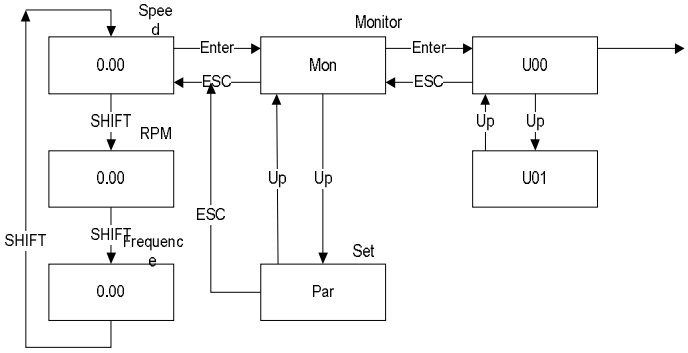
Spee
d
Monitor
0.00
Enter
Mon
Enter
U00
ESC
ESC
SHIFT
RPM
Up
Up
0.00
U01
Up
Up
ESC
SHIFT
SHIFT
Frequenc
e
Set
0.00
Par